City of Cheyenne - Purchasing
2101 O'Neil Avenue, Room 309
Cheyenne, WY 82001
307-773-1045
tbarttelbort@cheyennecity.org

ADDENDUM NUMBER ONE
BID E-11-22

To: All Prospective Bidders and all others concerned

From: City of Cheyenne, Purchasing Manager, TJ Barttelbort

Date: January 13, 2022

Subject: Addendum Number One to Bid E-11-22 for Eight (8) light poles, for the City of Cheyenne, Engineering Department

---

The changes, clarifications, omissions, additions, and/or alterations in, on, and to the bid information and specifications shall apply to the Invitation For Bid submitted for and to the project indicated above. Except as modified by this Addendum Number One, all of the terms and provisions of the Invitation for Bid for the above listed project remain in full force and effect. This Addendum Number One supersedes all previous instructions pertaining to the items listed:

CLARIFICATIONS:

C1: One (1) Additional Sheet is included with this Addendum One to provide the Lighting Fixture Schedule.

ADDENDUM ONE ACKNOWLEDGED:

BY_____ TITLE_____
(Addendum **must** be signed and returned with bid or receipt of the addendum **must** be acknowledged on the Invitation to Bid).

ELECTRICAL LEGEND

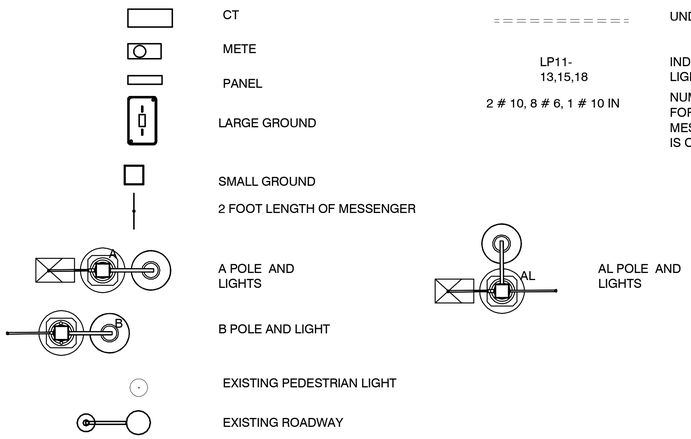

CT

METE

PANEL

LARGE GROUND

SMALL GROUND

2 FOOT LENGTH OF MESSENGER

A POLE AND LIGHTS

B POLE AND LIGHT

EXISTING PEDESTRIAN LIGHT

EXISTING ROADWAY

UNDERGROUND

LP11-13,15,18 — INDICATES PANEL AND CIRCUITS, 13,15 IS THE 208 OR 240 VOLT LIGHTS

2 # 10, 8 # 6, 1 # 10 IN — NUMBER OF WIRES, SIZE WIRES AND CONDUIT SIZE, FIRST SET IS FOR THE 208 OR 240 VOLT LIGHTS, NEXT SET IS THE WIRES FOR THE MESSENGER RECEPTACLES, NEXT SET IS GROUND WIRE AND LAST IS CONDUIT SIZE

AL POLE AND LIGHTS

SHEET LIST

Sheet Number	Sheet Name
E-100	LEGENDS, LIGHTING SCHEDULE AND POLE FOUNDATION DETAIL
E-101	ELECTRICAL SITE DEMOLITION - WARREN TO PIONEER
E-201	OVERALL ELECTRICAL SITE - WARREN TO PIONEER
E-202	ELECTRICAL SITE - WARREN TO CENTRAL (ALTERNATE # 1)
E-203	ELECTRICAL SITE - CENTRAL TO CAPITOL (BASE BID)
E-204	ELECTRICAL SITE - CAPITOL TO CAREY (BASE BID)
E-205	ELECTRICAL SITE - CAREY TO PIONEER, ALTERNATE # 2
E-300	LED MESSENGER LIGHTING, DETAILS & SCHEDULES
E-301	SECTIONS OF POLES A AND B
E-302	PANELBOARD SCHEDULES
E-303	PANELBOARD SCHEDULES

Professional Engineer (Electrical) MYRON H. GUST 3486 WYOMING

NOT FOR CONSTRUCTION

NO.	REVISION	DATE

LIGHTING FIXTURE SCHEDULE PHASE II

Type Mark	Manufacturer	Model	Lamp	Description	Image
A	ARCHITECTURAL AREA LIGHTING / LEOTEK	UCM-ANG-T5-32LED-4K-700-SLA24(5)-2-2-BBS25.5"-DB2-5R24-250-GFI-BL / GC1-40F-MV-NW-2-GY-700	LED	24 FOOT POLE, SEE PLAN DETAILS FOR ADDITIONAL REQUIREMENTS, PROVIDE CONCRETE BASE	
AL	ARCHITECTURAL AREA LIGHTING / LEOTEK	UCM-ANG-T5-32LED-4K-700-SLA24(5)-2-2-BBS25.5"-DB2-5R24-250-GFI-BL / GC1-40F-MV-NW-2-GY-700	LED	24 FOOT POLE, SEE PLAN DETAILS FOR ADDITIONAL REQUIREMENTS, PROVIDE CONCRETE BASE, PEDESTRIAN LIGHT 90 DEGREE LEFT	
B	ARCHITECTURAL AREA LIGHTING	UCM-ANG-T5-32LED-4K-700-SLA24(5)-2-2-BBS25.5"-DB2-5R24-250-GFI-BL	LED	24 FOOT POLE, SEE PLAN DETAILS FOR ADDITIONAL REQUIREMENTS, PROVIDE CONCRETE BASE	
BL	ARCHITECTURAL AREA LIGHTING	UCM-ANG-T*-32LED-4K-700-SLA24(5)-2-2-BBS25.5"-DB2-5R24-250-GFI-BL	LED	24 FOOT POLE, SEE PLAN DETAILS FOR ADDITIONAL REQUIREMENTS, PROVIDE CONCRETE BASE, PEDESTRIAN LIGHT 90 DEGREE LEFT	
BR	ARCHITECTURAL AREA LIGHTING	UCM-ANG-T*-32LED-4K-700-SLA24(5)-2-2-BBS25.5"-DB2-5R24-250-GFI-BL	LED	24 FOOT POLE, SEE PLAN DETAILS FOR ADDITIONAL REQUIREMENTS, PROVIDE CONCRETE BASE, PEDESTRIAN LIGHT 90 DEGREE RIGHT	
C	PREMUS LIGHTING	DSW-24-120-PLED-S14-24K-(LENGTHS AS SHOWN)	035-S14-LED-WW-PEM	1.2 WATT PER TWO FEET, LED MEDIUM BASE LAMP, 20,000 HOUR RATED, 3000K, BULK REELS 330 FEET, CUT LENGTH AS REQUIRED FOR EACH CIRCUIT, PROVIDE PLUG KIT FOR EACH CRKT. HANG FROM AIRCRAFT CABLE WITH ATTACHMENT SNAP CLIP. PROVIDE 50 SPARE LAMPS TO THE OWNER.	
Grand total: 1585					

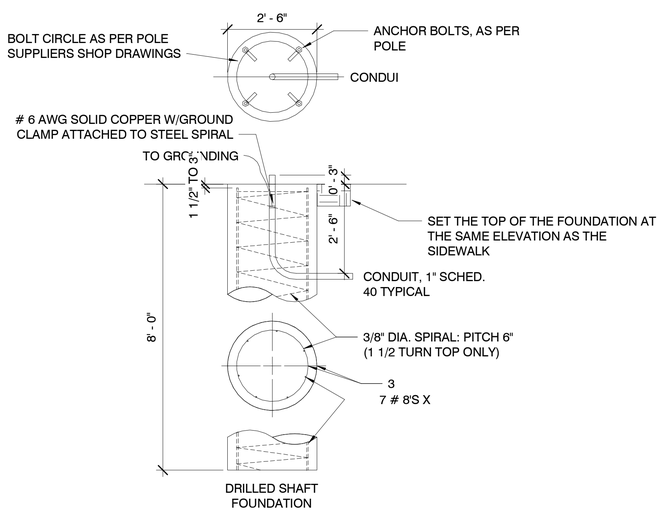

PREPARED FOR:
CITY OF CHEYENNE
2101 O'NEIL AVENUE
CHEYENNE, WY 82001
307-334-3612

PROJEC
I 7TH STREET IMPROVEMENTS

DRAWING TITLE:
LEGENDS, LIGHTING SCHEDULE AND POLE FOUNDATION DETAIL

avi p.c. engineering planning surveying
PHONE (307) 637-6017
1103 OLD TOWN LANE, SUITE 101
CHEYENNE, WY 82009
AVI@AVIPC.COM

DATE: 5/20/16

DRAWN BY: MH

DESIGNED MHG

CHECKED MH

JOB NO.: 3833

DRAWING NO. E-100 OF 10

GUST ENGINEERING - 2016